FICER Technology Co., Ltd.
明虹科技股份有限公司

2F, No.138, Daye Rd., Beitou Dist.,
Taipei City 112030, Taiwan
www.Ficer.com

SKU: 0TF0N33-xx

25G SFP28 DWDM Transceiver
Hot Pluggable, Duplex LC, 100GHz DWDM EML, SMF 10KM, DDM, C-Temp

Part Number: FSPP-N7-Dxx-10DQ

Overview

FSPP-N7-Dxx-10DQ is a Small Form Factor Pluggable SFP28 transceiver compliant with SFF-8402 SFP28 MSA standard. The high performance cooled DWDM EML transmitter and high sensitivity receiver with built-in CDR provide superior performance for 25GBASE-LR Ethernet, CPRI Option #10 and DWDM Networks applications up to SMF 10km.

Applications

- 25GBASE-LR Ethernet @25.78G
- CPRI Option #10 @24.33G
- eCPRI 5G Mobile Networks
- DWDM Networks

Features

- Compatible with IEEE802.3cc 25GBASE-LR
- Compliant with CPRI option10
- Compliant with SFF-8402 SFP28 MSA
- Data Rate up to 25.78Gbps
- Built-in CDR on both Transmitter and Receiver
- Hot Pluggable
- C-Band 100GHz DWDM EML laser transmitter
- PIN Receiver
- Duplex LC connector
- 2-wire interface for management and diagnostic monitor compliant with SFF-8472
- Single +3.3V power supply
- Link distance 10km over SM fiber
- Operating Temperature 0~+70°C
- Maximum power consumption 2.3W
- RoHS Compliant

Laser Safety

- This is a Class 1 Laser Product complies with 21 CFR 1040.10 and 1040.11 except for conformance with IEC 60825-1 Ed. 3., as described in Laser Notice No. 56, dated May 8, 2019.
- Caution: Use of control or adjustments or performance of procedure other than those specified herein may result in hazardous radiation exposure.

TEL+886-2-2898-3830 FAX+886-2-2898-3840 Sales@Ficer.com

Absolute Maximum Ratings

Parameters	Symbol	Min.	Max.	Unit
Storage Temperature	T_{ST}	-40	+85	°C
Relative Humidity	RH	5	85	%
Supply Voltage	V_{CC}	-0.5	+3.6	V

Recommended Operating Conditions

Parameters	Symbol	Min.	Typ.	Max.	Unit
Case Operating Temperature	T_{OP}	0	-	+70	°C
Supply Voltage	V_{CC}	+3.13	+3.3	+3.47	V
Supply Current	I_{CC}	-	-	680	mA
Power Consumption	P			2.3	W

Transmitter Electro-optical Characteristics

V_{CC} = 3.13V to 3.47V, T_{OP} = 0 °C to +70 °C

Parameters	Symbol	Min.	Typ.	Max.	Unit	Note
Operating Data Rate	DR	24.33	25.78		Gb/s	
Optical Launch Power	Po	0		+5	dBm	1
Optical Center Wavelength	λc	λc-0.1	λc	λc+0.1	nm	
Spectral Width (-20dB)	Δλ			1	nm	
Side Mode Suppression Ratio	SMSR	30			dB	
Optical Extinction Ratio	ER	6			dB	
Transmitter Dispersion Penalty	TDP			2.7	dB	2
Optical Eye Mask		IEEE 802.3cc				
Relative Intensity Noise	RIN			-130	dB/Hz	
Differential Data Input Swing	V_{IN}	180		850	mV	
Tx Disable Input Voltage-Low (Tx ON)	$TDISV_L$	GND		0.8	V	
Tx Disable Input Voltage-High (Tx OFF)	$TDISV_H$	2.0		Vcc	V	
Tx Fault Output Voltage-Low (Tx Normal)	$TFLTV_L$	GND		0.8	V	
Tx Fault Output Voltage-High (Tx Fault)	$TFLTV_H$	2.0		Vcc	V	

Note1: The optical power is launched into a 9/125μm single mode fiber.
Note2: After 10km G.652D 9/125μm single mode fiber.

Receiver Electro-optical Characteristics

V_{CC} = 3.13V to 3.47V, T_{OP} = 0 °C to +70 °C

Parameters	Symbol	Min.	Typ.	Max.	Unit	Note
Operating Data Rate	DR	24.33	25.78		Gb/s	
Receiver Sensitivity	SEN			-14	dBm	1
Maximum Receive Power	$P_{RX\text{-}MAX}$	+2			dBm	1
Optical Center Wavelength	λc	1510		1570	nm	
LOS De-Assert	LOS_D			-15	dBm	
LOS Assert	LOS_A	-35			dBm	
LOS Hysteresis	LOS_{HY}	0.5			dB	
Differential Data Output Swing	V_{OUT}	300		900	mV	
Receiver LOS Signal Output Voltage-Low	$LOSV_L$	GND		0.8	V	
Receiver LOS Signal Output Voltage-High	$LOSV_H$	2.0		Vcc	V	

Note1: Measured with a PRBS 2^{31}-1 test pattern @25.78Gbps BER<$5x10^{-5}$.

Pin Assignment

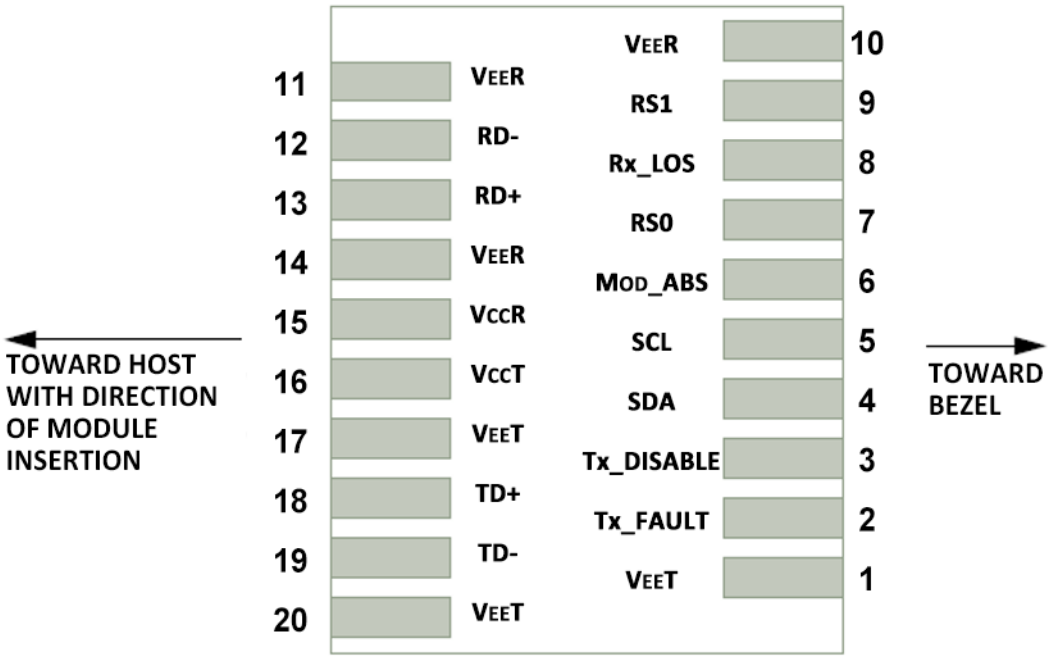

Host PCB SFP28 Pad Assignment Top View

Pin Description

Pin	Name	Function / Description
1	VEET	Transmitter Ground
2	Tx_FAULT	Transmitter Fault Indication (1)
3	Tx_DISABLE	Transmitter Disable – Turns off transmitter laser output (2)
4	SDA	2-wire Serial Interface Data Line (SDA: Serial Data Signal) (3)
5	SCL	2-wire Serial Interface Clock (SCL: Serial Clock Signal) (3)
6	MOD_ABS	Module Absent, connected to VEET or VEER in the module (3)
7	RS0	Rate Select 0, optional (5)
8	Rx_LOS	Receiver Loss of Signal Indication (4)
9	RS1	Rate Select 1, optional (5)
10	VEER	Receiver Ground
11	VEER	Receiver Ground
12	RD-	Receiver Inverted Data output, AC coupled
13	RD+	Receiver Non-Inverted Data output, AC coupled
14	VEER	Receiver Ground
15	VCCR	Receiver 3.3V Power Supply
16	VCCT	Transmitter 3.3V Power Supply
17	VEET	Transmitter Ground
18	TD+	Transmitter Non-Inverted Data Input, AC coupled
19	TD-	Transmitter Inverted Data Input, AC coupled
20	VEET	Transmitter Ground

Note1: Tx Fault is open collector/drain output which should be pulled up externally with a 4.7K~10KΩ resistor on the host board to supply <VccT+0.3V or VccR+0.3V. When high, this output indicates a laser fault of some kind. Low indicates normal operation. In the low state, the output will be pulled to <0.8V.

Note2: Tx Disable input is used to shut down the laser output per the state table below. It is pulled up within the module with a 4.7K~10KΩ resistor. 1) Low(0~0.8V): Transmitter on; 2) Between(0.8V and 2V): Undefined; 3) High (2.0~ VccT): Transmitter Disabled; 4) Open: Transmitter Disabled.

Note3: These are the module definition pins. They should be pulled up with a 4.7K~10KΩ resistor on the host board to supply less than VccT+0.3V or VccR+0.3V. MOD_ABS is grounded by the module to indicate that the module is present.

Note4: Rx_LOS (Loss of signal) is an open collector/drain output which should be pulled up externally with a 4.7K~10KΩ resistor on the host board to supply <VccT+0.3V or VccR+0.3V. When high, this output indicates the received optical power is below the worst case receiver sensitivity (as defined by the standard in use). Low indicates normal operation. In the low state, the output will be pulled to <0.8V.

Note5: Tied to ground through a 30K ohm resistor

Digital Diagnostic Functions

As defined by the SFP MSA (SFF-8472) Ficer's SFP28 transceivers provide digital diagnostic functions via a 2-wire serial interface, which allows real-time access to the following operating parameters:

- Transceiver temperature
- Laser bias current
- Transmitted optical power
- Received optical power
- Transceiver supply voltage

It also provides a sophisticated system of alarm and warning flags, which may be used to alert end-users when particular operating parameters are outside of a factory-set normal range.

The operating and diagnostics information is monitored and reported by a Digital Diagnostics Controller (DDC) inside the transceiver, which is accessed through the 2-wire serial interface. When the serial protocol is activated, the serial clock signal (SCL pin) is generated by the host. The positive edge clocks data into the SFP28 transceiver into those segments of its memory map that are not write-protected. The negative edge clocks data from the SFP28 transceiver. The serial data signal (SDA pin) is bi-directional for serial data transfer. The host uses SDA in conjunction with SCL to mark the start and end of serial protocol activation. The memories are organized as a series of 8-bit data words that can be addressed individually or sequentially.
For more detailed information including memory map definitions, please see the SFP MSA (SFF-8472) Specification.

Digital Diagnostic Memory Map

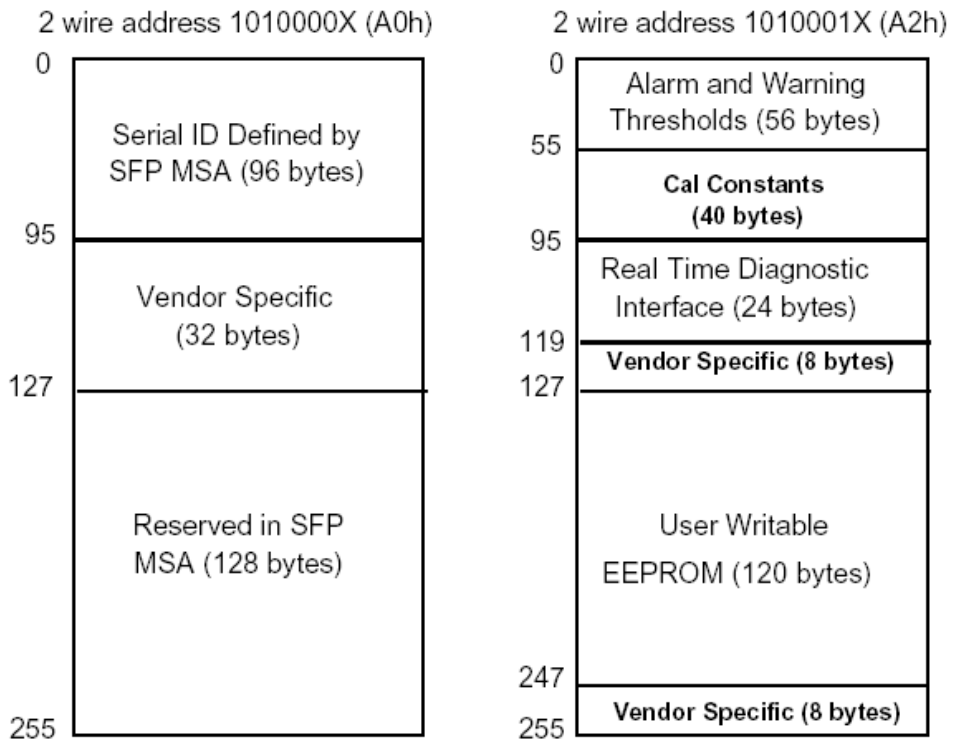

Digital Diagnostic Monitoring Characteristics

Parameter	Accuracy	Unit	Note
Temperature	±3	°C	Internal Calibration
Supply Voltage	±0.1	V	Internal Calibration
Tx Bias Current	±5	mA	Internal Calibration
Tx Output Power	±3	dB	Internal Calibration
Rx Received Optical Power	±3	dB	Internal Calibration

2F, No.138, Daye Rd., Beitou Dist.,
Taipei City 112030, Taiwan
www.Ficer.com

SKU: 0TF0N33-xx

Mechanical Dimensions

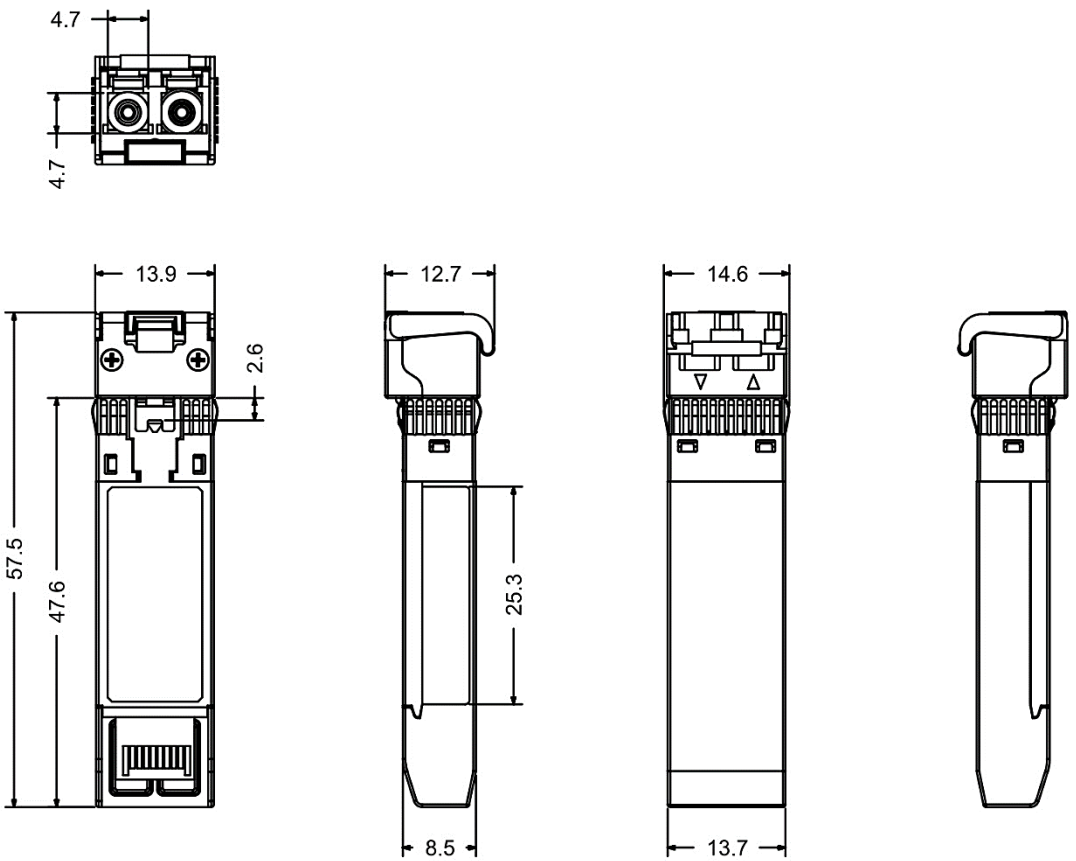

(All Dimensions are ±0.20mm Unless Otherwise Specified, Unit: mm)

Ordering Information

Part No.	Tx	Rx	Link	DDM	Temp.
FSPP-N7-Dxx-10DQ	100GHz ITU Grid C-Band DWDM	1510nm ~ 1570nm	SMF 10km	Yes	0~+70°C

ps: xx=DWDM Channel Number. Please refer to appendix A for more detail.

Note: Distances are indicative only. To calculate a more precise link budget based on specific conditions in your application, please refer to the optical characteristics.

TEL+886-2-2898-3830 FAX+886-2-2898-3840 Sales@Ficer.com

2F, No.138, Daye Rd., Beitou Dist.,
Taipei City 112030, Taiwan
www.Ficer.com

SKU: 0TF0N33-xx

Appendix A: 100GHz ITU Grid DWDM Central Wavelength Table

Channel	Central Wavelength(nm)	Frequency (THZ)
CH61	1528.77	196.1
CH60	1529.55	196.0
CH59	1530.33	195.9
CH58	1531.12	195.8
CH57	1531.90	195.7
CH56	1532.68	195.6
CH55	1533.47	195.5
CH54	1534.25	195.4
CH53	1535.04	195.3
CH52	1535.82	195.2
CH51	1536.61	195.1
CH50	1537.40	195.0
CH49	1538.19	194.9
CH48	1538.98	194.8
CH47	1539.77	194.7
CH46	1540.56	194.6
CH45	1541.35	194.5
CH44	1542.14	194.4
CH43	1542.94	194.3
CH42	1543.73	194.2
CH41	1544.53	194.1
CH40	1545.32	194.0
CH39	1546.12	193.9
CH38	1546.92	193.8
CH37	1547.72	193.7
CH36	1548.51	193.6
CH35	1549.32	193.5
CH34	1550.12	193.4
CH33	1550.92	193.3
CH32	1551.72	193.2
CH31	1552.52	193.1
CH30	1553.33	193.0
CH29	1554.13	192.9
CH28	1554.94	192.8
CH27	1555.75	192.7
CH26	1556.55	192.6
CH25	1557.36	192.5
CH24	1558.17	192.4
CH23	1558.98	192.3
CH22	1559.79	192.2
CH21	1560.61	192.1
CH20	1561.42	192.0
CH19	1562.23	191.9
CH18	1563.05	191.8
CH17	1563.86	191.7

TEL+886-2-2898-3830 FAX+886-2-2898-3840 Sales@Ficer.com